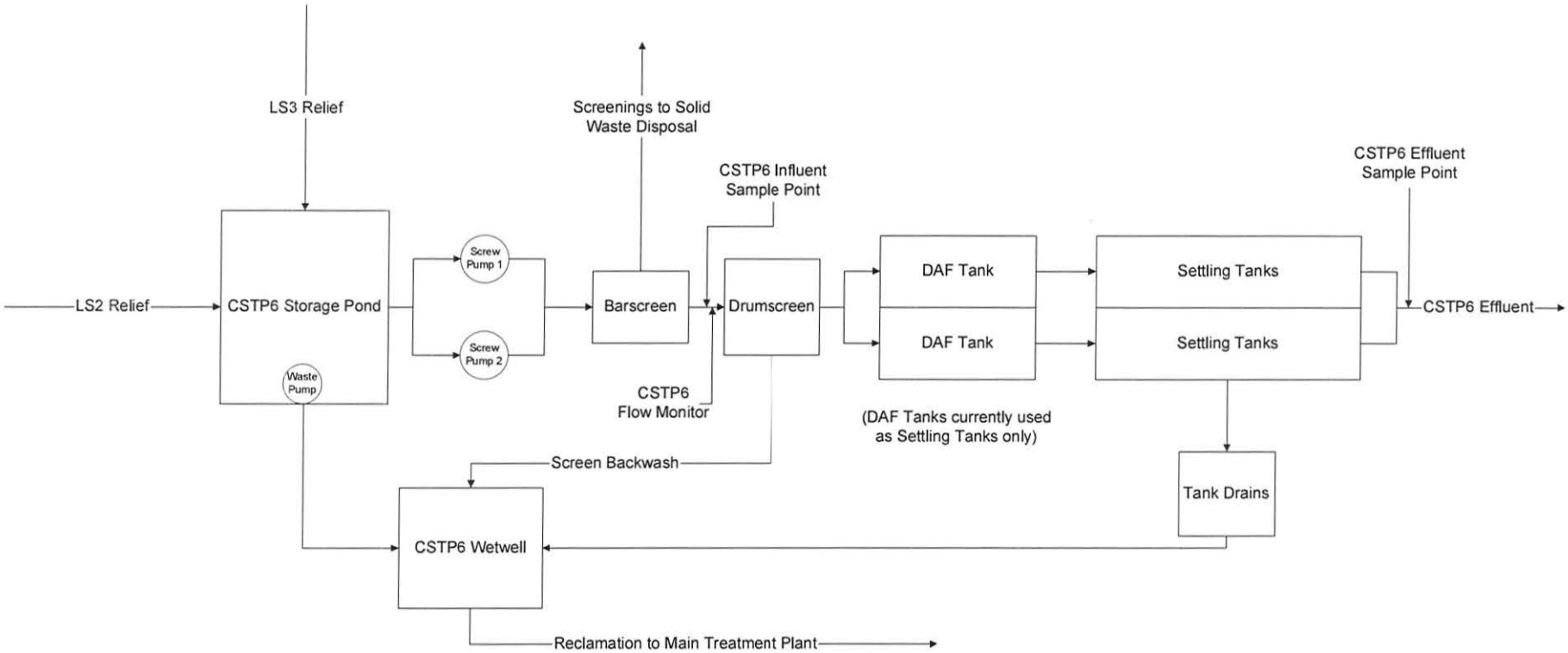CSTP6 Treatment Schematic