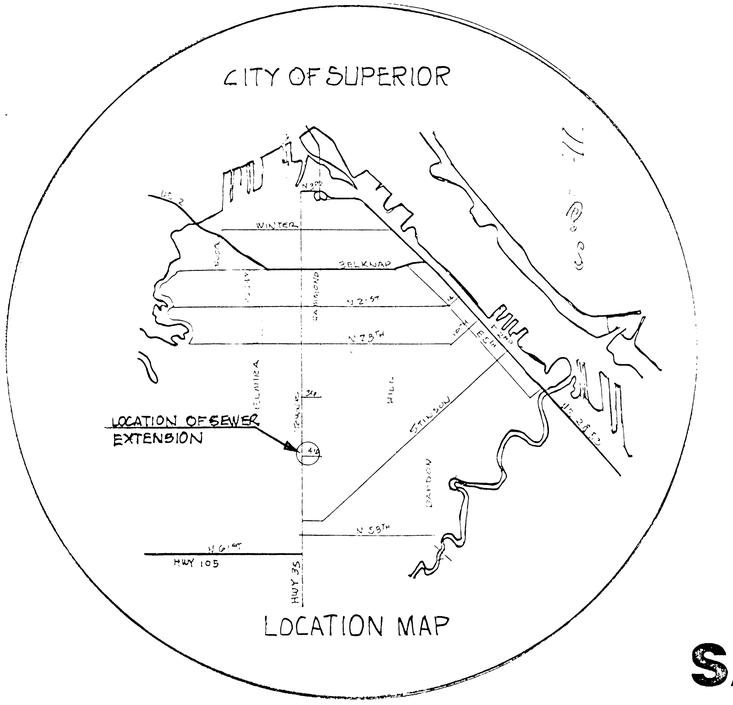

LOCATION MAP

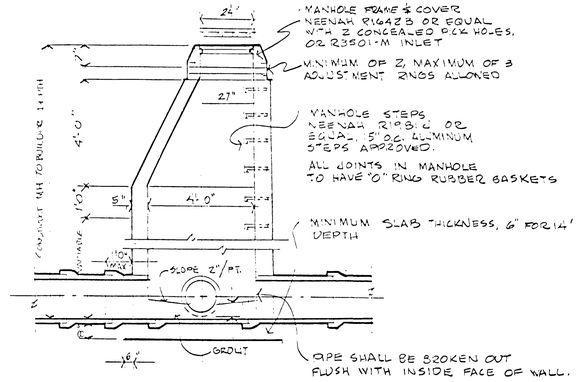

TYPICAL MANHOLE SECTION

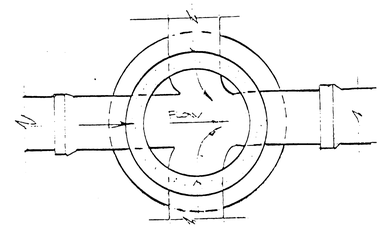

DETAIL SHOWING FLOW ON M.H. BOTTOM W/ MULTI-DIRECTION

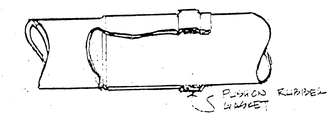

JOINT DETAIL

PIPE & FITTINGS SHALL MEET THE REQUIREMENTS FOR PVC SEWER PIPE A.S.T.M. D-3034.

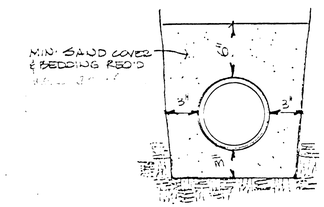

TRENCH & BACKFILL DETAIL

CITY OF SUPERIOR

SANITARY SEWER EXTENSION

N. 46 TH ST.

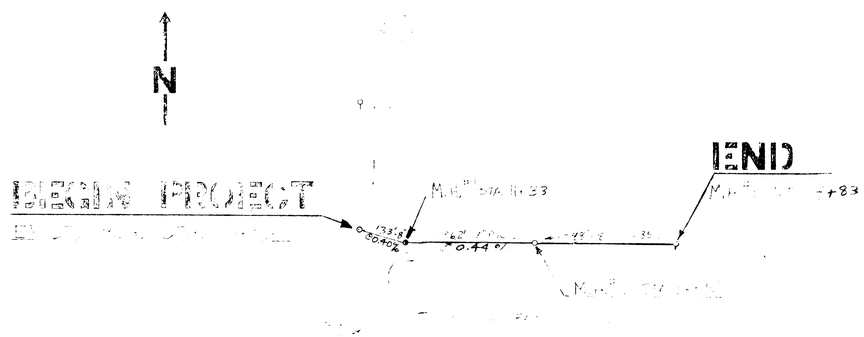

LOCATION PLAN

SCALE: 1" = 200'

CONSTRUCTION NOTES :

Utilities shown on these plans are approximate locations only.
Contracter is responsible for all utility locations.
CONTACT Superior Water Light and Power Company for all water, gas, and electric utility locations.

CONTACT Wisconsin Bell Telephone for all underground telephone cables.

CONTACT Group W Cable T.V. for all cable T.V. lines.

Contracter is responsible for coordination with all utility companies for all relocations ,etc. for all underground or overhead utilities.
Contracter is responsible for the cost of utility relocations unless specifically excluded elsewhere in the specifications.
Contracter is responsible for all pavement crossings. Pavement shall be neatly sawcut. Subgrade and pavement shall be restored to the original condition.

Contracter shall coordinate with the City of Superior Public Works Department for location of City owned storm and sanitary sewers or other facilities. Contracter shall coordinate with the City Plumbing Inspector for construction of sanitary sewers.

CITY OF SUPERIOR
SANITARY SEWER EXTENSION

SHEET 1 OF 3